GOVERNMENT OF WESTERN AUSTRALIA

Department of
Energy and Economic Diversification

Energy Policy WA

Plug-in solar and battery systems

Technical Bridging Standard

DR EPWA-TBS-75-001

Version 1, October 2026

Contents

Introduction 4
1 Scope and general 5
2 Legislation and technical standards 5
2.1 Relevant legislation 5
2.2 Technical standards 5
3 Terms and abbreviations used 8
3.1 Terms 8
3.2 Abbreviations 12
4 Configurations and maximum power output 13
4.1 Electrical limits 13
4.2 Appliance categories and mounting layouts 13
4.2.1 Protection class 13
4.2.2 Device types 13
5 Technical requirements – electrical and mechanical 17
5.1 General 17
5.2 Overvoltage category 17
5.3 Electromagnetic compatibility 17
5.4 Ingress protection 17
5.5 Protection from mechanical hazards 18
5.5.1 Mounting systems 18
5.5.2 Corrosion resistance 18
5.5.3 Weather resistance 19
5.6 Protection from electrocution 19
5.6.1 General 19
5.7 Residual current devices 19
5.8 Protection from fire 19
6 Technical requirements – connectors, cables, and faults 20
6.1 AC and DC cables 20
6.2 Plugs, socket-outlets, and connectors 20
6.2.1 General 20
6.2.2 DC connectors 20
6.2.3 AC connectors and stricter than standard residual voltage 21
6.3 Photovoltaic modules 23
6.4 Inverter 23
6.4.1 General 23
6.4.2 AC side connection 24
6.4.3 Fault display and messages 24

6.5 Battery storage modules 24
6.5.1 General 25
6.5.2 Cell and battery safety 25
6.5.3 Electrical integration with the inverter (DC side) 26
6.5.4 Marking and documentation 26
6.5.6 Battery-specific mandatory type tests 27
Ref 27
Topic 27
Type test 27
Test pass criteria 27
7 Distribution network requirements 28
8 Marking and documentation 28
8.1 General 28
8.2 Marking 28
8.2.1 General 28
8.2.2 Warning markings 28
8.2.3 Marking 28
8.3 Documentation 30
8.3.1 General 30
8.3.2 Assembly and setup 31
8.3.3 Identifying circuits 32
8.3.4 Decommissioning and disassembly 32
8.3.5 Disposal 32
9 Device tests 33
9.1 General 33
9.2 Type tests 33
9.3 Reporting 38

Introduction

This document defines product and installation requirements for solar and battery systems that users connect to a standard wall socket-outlet, referred to as **plug-in generators**. The WA Department of Energy and Economic Diversification (DEED) has prepared this Technical Bridging Standard (TBS) to overcome barriers in existing technical standards that prevent people from using the systems.

DEED and the Department of Local Government, Industry Regulation and Safety (LGIRS) are together consulting on the draft TBS.

We expect future updates to Australian and New Zealand Standards to supersede the TBS but that it will form the basis of those AS/NZS updates. To support this and align with typical AS/NZS drafting, we expect the final TBS to consist of separate parts for product requirements and installation requirements.

All plug-in generators supplied or sold in Western Australia must adhere to the TBS, which is the basis for type testing and should be read together with standards in the table below.

Technical standard	Purpose
DIN VDE V 0126-95	The German technical specification on which Western Australia's TBS is based, with some local modifications to reflect different plugs and methods for calculating structural wind loading. To maximise compatibility, this bridging standard and DIN VDE V 0126-95 are as similar as possible, but the TBS takes priority where the two are inconsistent.
AS/NZS 4777.2:2020	Specifies the behaviour of inverters connected to the low-voltage part of the distribution network (under 1000 V). It covers all residential and small-scale commercial solar system behaviour as well as the steps that manufacturers need to take to test grid protection requirements.
AS/NZS 3112:2025	Specifies the layout and safety requirements of the Type I plug used for mains power throughout Australia and New Zealand.
AS/NZS 3000:2018 (Wiring Rules)	Sets principles and minimum regulatory requirements for electrical work throughout Australia and New Zealand.
AS/NZS 4417.1:2012 **AS/NZS 4417.2:2020**	Provides general requirements for obtaining and using the Regulatory Compliance Mark (RCM). The RCM is a legal requirement for 'in-scope appliances' before they can be sold to consumers. The requirement applies if an appliance's AC voltage exceeds 50V and so plug-in generators are in-scope.

DRAFT

1 Scope and general

The TBS specifies type testing, installation, safety, and grid protection requirements for plug-in generators intended for use in parallel with low voltage circuits (under 1000 V). Plug-in generators supply electricity to low voltage circuits through a wall socket-outlet designed for electrical supply to loads, and which is installed according to the Wiring Rules.

Plug-in generators comprise assemblies of photovoltaic modules, supplementary supply inverter, mounting assembly, and an encapsulated cable and Type I plug according to AS/NZS 3112:2025 (Australian three-pin wall plug). Plug-in generators may include a battery storage module connected to the DC side of the inverter unit.

Battery storage modules only form part of the same plug-in generator if they are connected to the DC side of the same inverter as the solar modules. Solar-only and battery-only systems with their own inverter are two separate plug-in generators. Only one plug-in generator shall be used per household, and a plug-in generator must not be used at sites with an existing fixed installation (e.g. traditional rooftop solar).

The TBS defines conditions under which AS/NZS 3112:2025 Type I plugs must be used if they form part of a plug-in generator, and applies to single-phase plug-in generators for:

- residential use only
- at a nominal rated voltage of 230/240 V_{ac}
- at a rated frequency of 50 Hz, and
- with apparent power not exceeding 800 VA.

The TBS does not apply to:

- Systems installed under Western Power's WEM Procedure for Standard Small User Facilities (e.g. Basic EG systems)
- Systems installed under Horizon Power's Basic EG Connection Technical Requirements
- Building-integrated PV systems
- Other types of plug-in electricity generation, or
- Devices supplied alongside a plug-in generator to assist customers to monitor and match generator output with electricity use (e.g. monitoring sockets, CT clamps), which must comply with existing testing and certification requirements.

2 Legislation and technical standards

2.1 Relevant legislation

Western Australia Electricity System and Market Rules

Waste Avoidance and Resource Recovery (e-waste) Regulations 2024

National Construction Code 2025

2.2 Technical standards

The following documents are referred to in the TBS in such a way that some or all their content constitutes requirements of the TBS:

DIN VDE V 0126-95 (VDE V 0126-95):2025-12 – Plug-in solar devices for mains parallel operation, Part 95: Safety requirements and tests

ISO 7010-M002 – *Refer to instruction manual/booklet*

AS/NZS 3112:2025 – Approval and test specification - Plugs and socket-outlets

AS/NZS 4777.2:2020 – Grid connection of energy systems via inverters, Part 2: Inverter requirements

DRAFT

UL 94 – Classification and flame-retardant plastic materials

AS/NZS 3000:2018 – Electrical installations

AS/NZS 5033:2021 – Installation and safety requirements for photovoltaic (PV) arrays

AS/NZS 4417.1:2012 – Regulatory compliance mark for electrical and electronic equipment, Part 1: Use of the mark

AS/NZS 4417.2:2020 – Regulatory compliance mark for electrical and electronic equipment, Part 2: Specific requirements for particular regulatory applications (the RCM rules)

AS IEC 62619:2023 – Secondary cells and batteries containing alkaline or other non-acid electrolytes - Safety requirements for secondary lithium cells and batteries, for use in industrial applications

UN 38.3 Transportation testing for lithium-ion batteries

IEC 61140:2016 – Protection against electric shock – Common aspects for installation and equipment

IEC 60664-1:2020/AMD1:2025 – Insulation coordination for equipment within low-voltage supply systems

IEC 63056:2020 – Secondary cells and batteries containing alkaline or other non-acid electrolytes - Safety requirements for secondary lithium cells and batteries for use in electrical energy storage systems

AS/NZS 61000.6.1:2025 – Electromagnetic compatibility (EMC), Part 6.1: Generic standards - Immunity standard for residential, commercial and light-industrial environments (IEC 61000-6-1:2016 (ED. 3.0), MOD)

AS/NZS 61000.6.3:2021 – Electromagnetic compatibility (EMC) - Part 6.3: Generic standards - Emission standard for equipment in residential locations

AS 60529:2025 – Degrees of protection provided by enclosures (IP Code) (IEC 60529:1989 (ED. 2.2) MOD)

AS IEC 61032:2023 – Protection of persons and equipment by enclosures – Probes for verification

AS/NZS 61730.1:2024 – Photovoltaic (PV) module safety qualification, Part 1: Requirements for construction (IEC 61730-1:2023 (ED. 3.0), MOD)

AS/NZS 61730.2:2024 – Photovoltaic (PV) module safety qualification, Part 2: Requirements for testing (IEC 61730-2:2023 (ED. 3.0), MOD)

AS/NZS 61215.1:2023 – Terrestrial photovoltaic (PV) modules - Design qualification and type approval, Part 1: Test requirements (IEC 61215-1:2021, (ED.2.0) MOD)

EN 50618:2014 – Electric cables for photovoltaic systems

AS/NZS 3191:2008 – Electric flexible cords

AS/NZS 62852:2023 – Connectors for DC-application in photovoltaic systems - Safety requirements and tests (IEC 62852:2014 (ED. 1.1) MOD)

IEC 62790:2020 – Junction boxes for photovoltaic modules - Safety requirements and tests

AS/NZS 62109.1:2026 – Safety of power converters for use in photovoltaic power systems, Part 1: General requirements (IEC 62109-1:2010 (ED. 1.0) MOD)

AS/NZS 62109.2:2026 – Safety of power converters for use in photovoltaic power systems, Part 2: Particular requirements for inverters (IEC 62109-2:2011 (ED. 1.0) MOD)

AS/NZS IEC 62109.3:2023 – Safety of power converters for use in photovoltaic power systems, Part 3: Particular requirements for electronic devices in combination with photovoltaic elements

DRAFT

AS/NZS IEC 62116:2020 – Utility-interconnected photovoltaic inverters - Test procedure of islanding prevention measures

AS/NZS 62368.1:2026 – Audio/video, information and communication technology equipment, Part 1: Safety requirements (IEC 62368-1:2023, (ED. 4.0) MOD)

AS/NZS 1664.1:1997 – Aluminium structures, Part 1: Limit state design

AS/NZS 1664.2:1997 – Aluminium structures, Part 2: Allowable stress design

AS/NZS 1170.2:2021 – Structural design actions, Part 2: Wind actions

AS/NZS 61701:2023 – Photovoltaic (PV) modules - Salt mist corrosion testing (IEC 61701:2020, (ED. 3.0) MOD)

AS/NZS IEC 62716:2023 – Photovoltaic (PV) modules - Ammonia corrosion testing

AS 1768:2021 – Lightning protection

DRAFT

3 Terms and abbreviations used

3.1 Terms

Anti-islanding	Protective function that causes an inverter to cease supplying a circuit when the supply from the distribution network is lost, preventing the continued energisation of an isolated section of network.
Apparent power	Product of RMS voltage and RMS current at the point of connection, expressed in volt-amperes (VA)
Basic insulation	Insulation applied to live parts to provide basic protection against electric shock, as defined in AS/NZS 62109.1.
Battery management system (BMS)	Electronic system that monitors and controls the charge, discharge, temperature, and protective isolation of a battery storage module, and that disconnects the battery from the inverter on detection of an out-of-limit condition.
Battery storage module	Assembly of secondary cells, together with its battery management system, enclosure and terminations, supplied as part of a plug-in generator and connected exclusively to a DC input of the inverter designated by the inverter manufacturer for battery connection.
Building-integrated PV	Photovoltaic modules that form part of the building fabric and perform a structural, weatherproofing, or cladding function in addition to generating electricity.
Decisive voltage class (DVC)	Classification of a circuit according to the magnitude and duration of the voltages that can occur within it, as defined in AS/NZS 62109.1.
Distribution network service provider (DNSP)	Person or body responsible for operating a distribution network to which a plug-in generator is connected (for example, Western Power or Horizon Power).
Double or reinforced insulation	Insulation comprising both basic and supplementary insulation, or a single insulation system providing an equivalent degree of protection, as defined in AS/NZS 62109.1.
Escape route	Path of travel from any point in a building to a place of safety, including corridors, stairways, and external egress paths.
Fastening system	Mechanical connection to the supporting structure and/or the load-bearing components of the supporting structure.
Supplementary supply inverter	Inverter that synchronises its output to the voltage and frequency of an existing supply and does not establish a supply of its own.

DRAFT

Household	A single dwelling unit with its own electricity supply and switchboard. In buildings containing multiple dwellings (for example, strata complexes or apartments), each dwelling with its own switchboard is treated as a separate household.
Ingress protection (IP) rating	Degree of protection provided by an enclosure against access to hazardous parts, ingress of solid foreign objects and ingress of water, expressed by the IP code in AS 60529.
Inverter unit	Enclosed assembly containing the ~~inverter~~ and its associated protection, control, and connection provisions.
Licensed electrician	A person licensed under Western Australian legislation to carry out electrical work.
Maximum apparent power (S_{max})	The highest 10-minute average value of the measured apparent output power of a plug-in generator.
Maximum PV module DC power (P_{max})	Manufacturer's declared maximum power output of a PV module under standard test conditions in accordance with AS/NZS 61215.1.
Inverter	Supplementary supply inverter rated for connection to one or a small number of PV modules or a battery storage module, forming part of a plug-in generator.
Mounting system	Interface between the plug-in generator and the supporting structure, designed to withstand applied loads and to adjust the tilt angle of the PV modules, comprising fixing elements, anchoring components, ballast elements, supporting frame and fastening components.
Mounting type	The configuration of the plug-in generator mounting, according to the type of supporting structure to which it is attached (for example, balcony, ground, wall, or fence).
Multi-inverter system	Plug-in generator in which two or more sets of inversion electronics are connected in parallel to a single controller or protection device.
Multiport inverter system	Plug-in generator incorporating an inverter unit with two or more independent DC inputs, each served by its own set of inversion electronics.
Nominal usable energy capacity	Energy, in kilowatt-hours, that a battery storage module can deliver between its declared upper and lower state-of-charge limits under the manufacturer's declared reference conditions.
Nominal rated voltage	230/240 V
Ordinary person	A person who is not a licensed electrician.
Overvoltage category	Classification of equipment according to transient overvoltage it can be expected to withstand at its point of connection, as defined in IEC 60664-1.

DRAFT

Plug	A Type I plug with half-insulated pins, in accordance with AS/NZS 3112.
Plug-in generator	A device that conforms to this TBS.
Point of supply	The socket-outlet at which the plug-in generator is connected to the electrical installation.
Power connector	Pluggable connection assembly which a user can manually disconnect.
Protection class	Classification of equipment according to the means used to provide protection against electric shock (class I, class II, or class III), as defined in IEC 61140.
PV assembly	The packaged, interconnected assembly of solar cells that converts sunlight into direct current electricity.
PV module	The smallest complete, environmentally protected assembly of interconnected solar cells supplied as a single unit.
Residual current device (RCD)	Device intended to disconnect a circuit when the residual current attains a specified value.
Residual current breaker with overcurrent protection (RCBO)	Device combining residual current protection with overcurrent protection for a single circuit.
Routine test	Test carried out on each production unit, or on a defined sample of production units, to verify that the unit conforms to the tested design.
Second-life cell	A cell that has previously been placed in service in another application, even if it has been reconditioned or repurposed.
Single-fault condition	Condition in which one means of protection against a hazard is defective, or one fault that could give rise to a hazard is present.
Socket-outlet	Accessory of an electrical installation, complying with AS/NZS 3112, having socket contacts designed to engage with the pins of a plug and terminals for connection of cables.
State of charge (SOC)	Available capacity of a battery storage module expressed as a percentage of its nominal usable energy capacity.
Supporting structure	The building element or ground anchorage to which the mounting system is attached.
Switchboard	Assembly containing the protective devices for the final subcircuits of an electrical installation.

DRAFT

Technical file	The collection of documents retained by the manufacturer demonstrating conformity with this TBS, including type test reports, calculations, and declarations.
Thermal propagation	Spread of thermal runaway from one cell to one or more adjacent cells or modules within a battery storage module.
Thermal runaway	Self-sustaining exothermic reaction within a cell that causes an uncontrolled increase in cell temperature and pressure.
Type test	Test carried out on one or more representative samples of a design to demonstrate that the design conforms to this TBS.
Wiring Rules	AS/NZS 3000, Electrical installations.

DRAFT

3.2 Abbreviations

BMS	Battery management system
CT	Current transformer
DEED	Department of Energy and Economic Diversification (Western Australia)
DNSP	Distribution network service provider
DVC	Decisive voltage class
EG	Embedded generation
ES1	Electrical energy source class 1 (AS/NZS 62368.1)
EESS	Australian Electrical Equipment Safety System
LFP	Lithium iron phosphate
Li-ion	Lithium ion
MCB	Miniature circuit breaker
Na-ion	Sodium ion
NCC	National Construction Code
NMC	Nickel manganese cobalt
PELV	Protective extra-low voltage
P_{max}	Maximum PV module DC power
RCBO	Residual current breaker with overcurrent protection
RCD	Residual current device
RCM	Regulatory Compliance Mark
SELV	Safety extra-low voltage
S_{max}	Maximum apparent power

DRAFT

4 Configurations and maximum power output

4.1 Electrical limits

Manufacturers must design plug-in generators such that apparent power supplied to a mains installation does not exceed 800 VA (S_{max}) and current supplied does not exceed 3.5 A.

The combined power output of PV and battery storage modules for a plug-in generator must not exceed 2000 W_{dc} (P_{max}).

4.2 Appliance categories and mounting layouts

4.2.1 Protection class

Plug-in generators must be class I or class II equipment, in accordance with IEC 61140:2016.

4.2.2 Device types

Plug-in generators may be classified into the following types:

4.2.2.1 Solar only

- Single-PV system (Figure 1)
- Double-PV system (Figure 2)
- Multi-PV system (Figure 3)
- Multiport inverter system (Figure 4)
- Multi-inverter system (Figure 5)

4.2.2.2 Solar and battery

- Battery-only system (Figure 6)
- Combined PV and battery system (Figure 7)

Figure 1: Single-PV system block diagram, showing a PV module and integrated inverter unit. DC-side connections are already established in the final system supplied to a user.

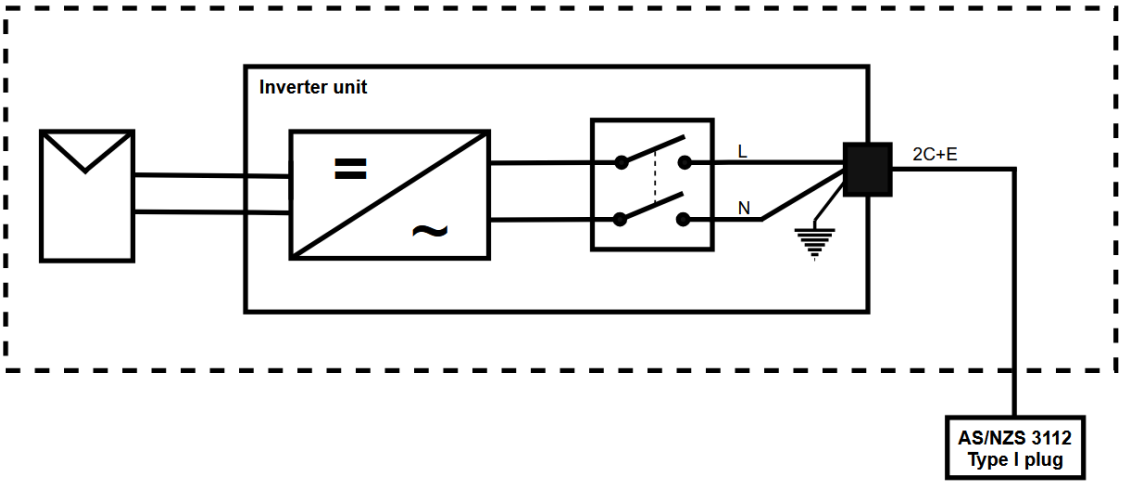

Figure 2: Double-PV system block diagram, showing a pre-assembled PV assembly and an inverter unit. The user assembles the kit using manufacturer-supplied cables to connect the PV assembly to the inverter unit, in accordance with manufacturer instructions.

Multiple PV modules must be connected to the inverter using individual cables and connectors, or by connecting in series or parallel using suitable manufacturer-provided interconnecting cables.

The PV modules must be configured such that open circuit voltage at the inverter input does not exceed 120 V_{dc}.

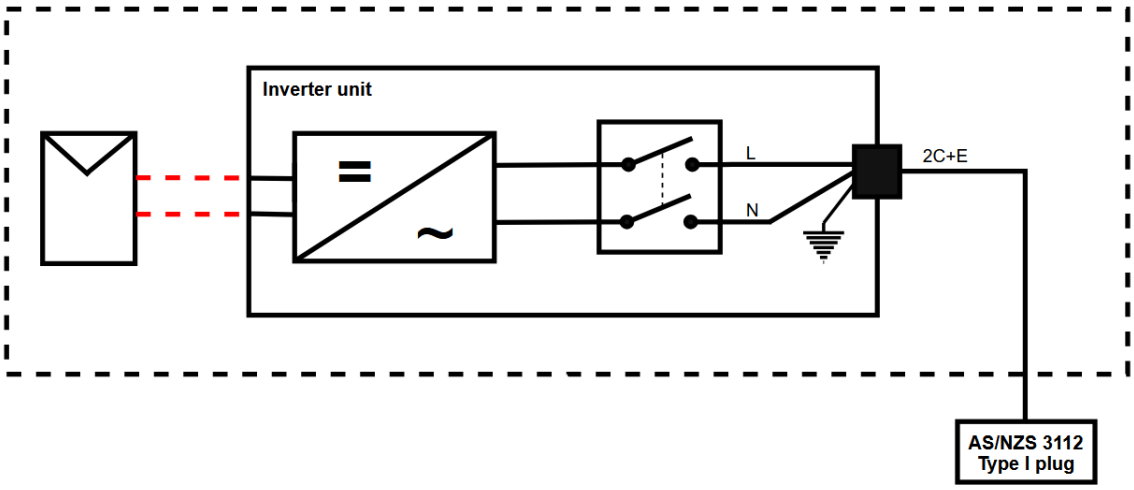

Figure 3: Multi-PV system block diagram, showing modular solar components and an inverter unit. The user assembles the kit using manufacturer-supplied cables to connect individual solar modules to each other, and to the inverter unit, in accordance with manufacturer instructions.

Multiple PV modules must be connected to the inverter using individual cables and connectors, or by connecting in series or parallel using suitable manufacturer-provided interconnecting cables.

The PV modules must be configured such that open circuit voltage at the inverter input does not exceed 120 V_{dc}.

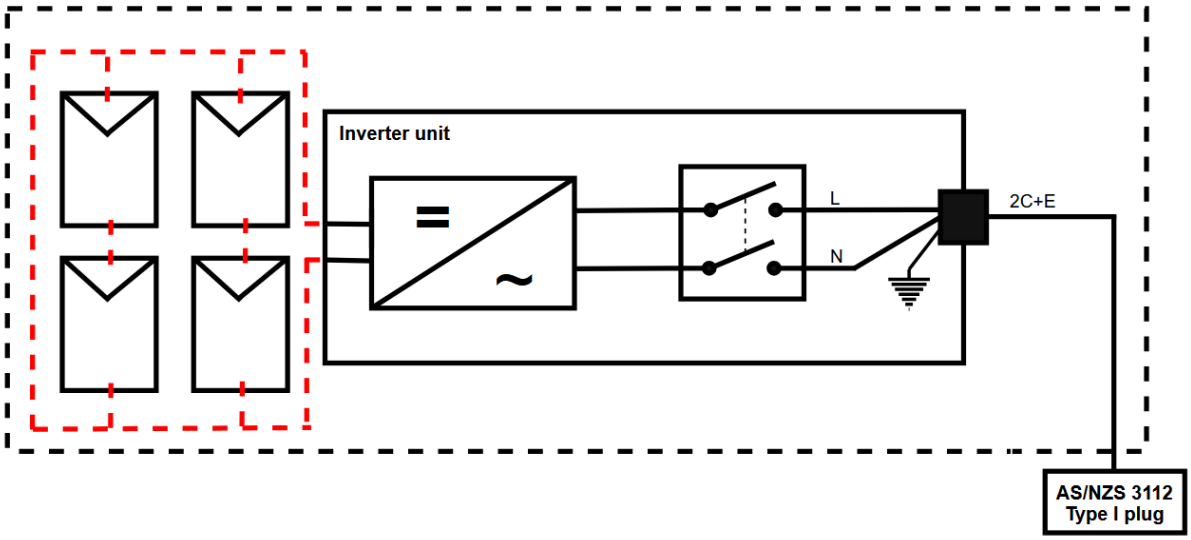

Figure 4: Multiport inverter system block diagram, showing modular solar assemblies and an inverter unit with two separate protection devices. The user assembles the kit using manufacturer-supplied cables, and the integrated inverter unit contains one set of inversion electronics for each port.

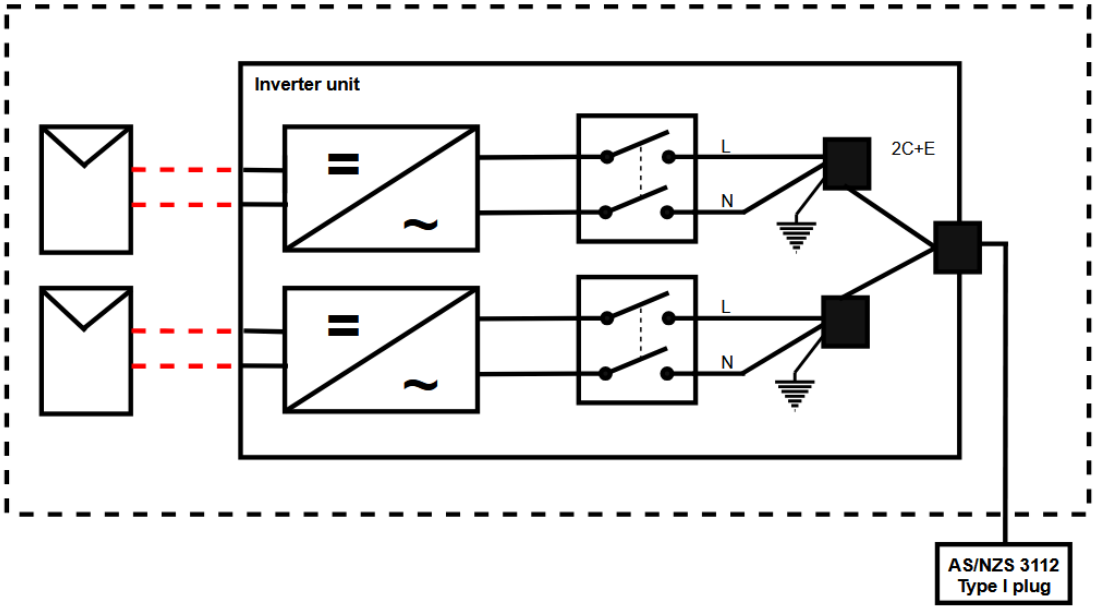

Figure 5: Multi-inverter system block diagram, showing modular assemblies for solar and some cable connections. In this configuration, multiple inversion electronics are connected in parallel to single controller/protection device. The user assembles the kit using manufacturer-supplied cables and connectors, and the inverter unit contains separate ports for different solar inputs.

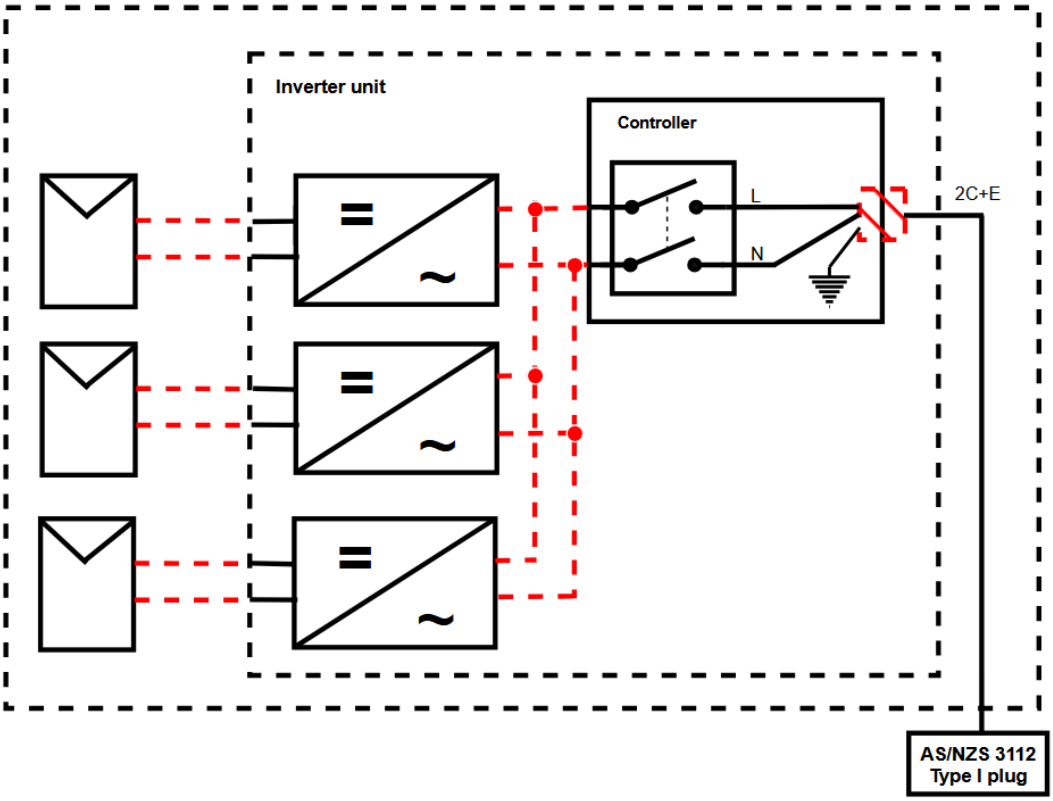

Figure 6: Battery-only system block diagram, showing a battery storage module and inverter unit, which the user assembles using manufacturer-supplied cables by connecting the battery to the inverter input.

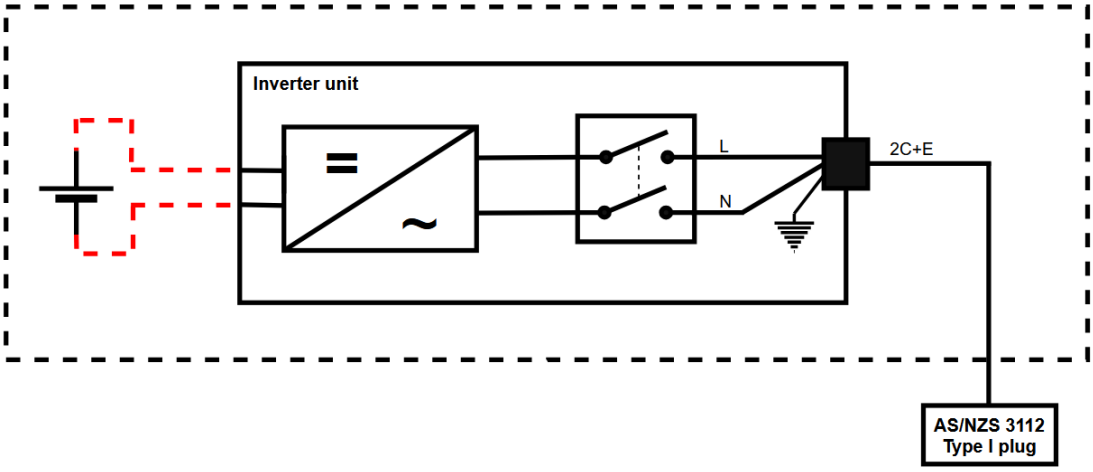

Figure 7: Combined PV and battery system block diagram, showing separate PV and battery storage components, which the user assembles using manufacturer-supplied cables by connecting the modules to respective inputs on the inverter unit. In this configuration, the modules connect to ports for a DC controller, which handles DC power for both devices including battery charging.

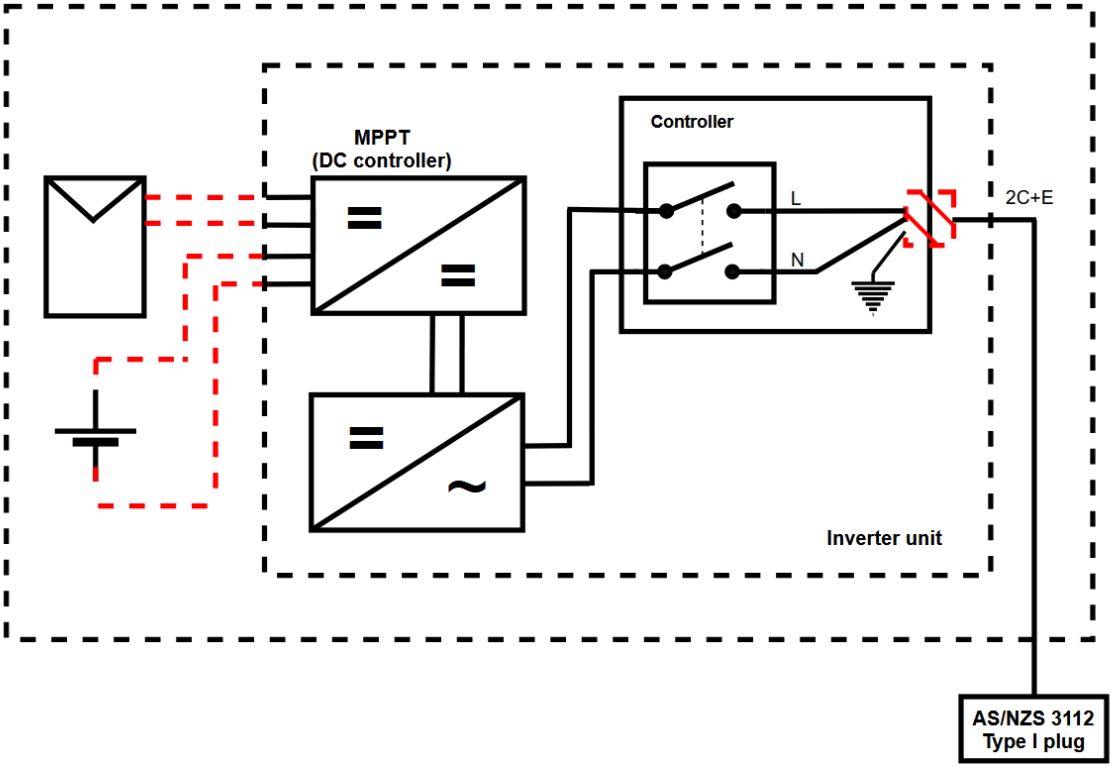

5 Technical requirements – electrical and mechanical

5.1 General

This section defines component requirements, which apply to the complete device and to individual components that form part of the plug-in generator assembly. Manufacturers must design and construct plug-in generators to withstand electrical, mechanical, thermal, and environmental stresses during intended use, so that they do not present a danger.

5.2 Overvoltage category

Manufacturers must design plug-in generators for a minimum overvoltage category II, in accordance with IEC 60664-1:2020/AMD1:2025.

5.3 Electromagnetic compatibility

Manufacturers must test immunity limits in accordance with AS/NZS 61000.6.1:2025.

The manufacturer-declared performance must meet the following criteria:

- Performance criteria A and B.
- Tests carried out at the inverter's maximum rated apparent power (≤ 800 VA). Performance criteria A is deemed to comply when power is over 75% of S_{max} during the test.

Manufacturers must test emissions in accordance with AS/NZS 61000.6.3:2021.

Tests must be carried out at maximum power that the inverter is capable of across the declared DC input voltage.

5.4 Ingress protection

For plug-in generators intended for outdoor use, the following items must have an ingress protection rating of at least IP55:

- Plug-in generator components
- Connections between components, and
- Plugs

Where manufacturers use non-IP55 components, they must achieve at least an IP55 rating for the complete assembly.

Components and connections intended for indoor use must achieve at least an IP44 rating.

Manufacturers must verify ingress protection in accordance with AS 60529:2025 under the following conditions:

- Device mounted for normal use in accordance with manufacturer instructions.
- Cable screw connections, grommets, and sealing plugs fitted with cables or conduits of the smallest and largest cross-sectional areas the manufacturer specifies.
- Cable and conduit systems installed in accordance with manufacturer instructions.
- Parts removable without a tool removed.
- Cable glands not filled with sealing compounds or similar materials.
- Testing carried out in accordance with AS 60529:2025.
- Testing carried out with test probe B, as specified in AS IEC 61032:2023, with a 1N test force. Protection is fulfilled if probe does not contact hazardous parts.
- After testing, the device must be inspected for ingress of water and comply with acceptance conditions, in accordance with AS 60529:2025.

DRAFT

5.5 Protection from mechanical hazards

The assembly, mounting and operation of plug-in generators must not lead to mechanical hazards under any conditions.

Manufacturers must ensure that edges, projections, corners, openings, and any accessible features are smooth and deburred to prevent injury or damage to electrical insulation.

Manufacturers must verify compliance for the plug-in generator complete assembly and components, in accordance with AS/NZS 61730.2:2024.

5.5.1 Mounting systems

Manufacturers must supply a mounting system as part of a complete plug-in generator assembly depending on customer mounting requirements. Unsecured mounting arrangements are not permitted.

The manufacturer must provide a complete specification of the mounting system, including individual components, and must provide a structural analysis to demonstrate the system is safe for intended use.

The manufacturer must define permitted mounting configurations and installation environments for the mounting system. The permitted mounting configuration must be defined such that installation does not introduce additional fire risk, including by avoiding placing the device near combustible materials.

The manufacturer must specify the minimum clearance between the PV module and mounted surface, and the minimum spacing between adjacent PV module required to ensure adequate ventilation and minimise heat accumulation. Where necessary to achieve adequate ventilation, the manufacturer must specify that PV modules are installed at an angle to the mounting surface.

The manufacturer or retailer must include in the installation instruction any restrictions relating to installation.

Installation instructions must specify that the plug-in generator must not compromise fire compartmentation of the performance of external walls in accordance with the National Construction Code.

Using structural analysis, manufacturers must demonstrate that systems meet load requirements for all permitted mounting configurations and locations, including when subjected to wind loads a reasonable person would expect in Western Australia, in accordance with AS/NZS 1664.1:1997 or AS/NZS 1664.2:1997 where aluminium members are used for the mounting system.

Manufacturers must determine wind loadings up to region B of AS/NZS 1170.2:2021.

Manufacturers must design the mounting system such that foreseeable wind loading does not result in detachment, instability, or falling components capable of injury or damage.

Manufacturers must design the system to ensure the mechanical stability of the device, including all externally mounted components.

The mounting system and permitted configurations must minimise reliance on user behaviour to ensure safety.

5.5.2 Corrosion resistance

5.5.2.1 General

Manufacturers must construct the mounting system with materials resistant to corrosion and suitable for its expected lifetime and operating conditions.

DRAFT

Fixings and fastening methods must not adversely affect the corrosion resistance of the mounting system.

Manufacturers must choose and assemble materials to prevent galvanic corrosion, including at interfaces between the mounting system and supporting structure. Where necessary, rubber isolators must be used.

5.5.2.2 Corrosive environments

The mounting system must be suitable for the intended installation environment, including environments with increased corrosion risk such as marine and agricultural environments.

Where materials are not inherently corrosion resistant, appropriate protective measures must be provided to ensure safety over the expected lifetime and operating conditions of the device.

Where the device is not suitable for installation in specific corrosive environments, manufacturers must clearly state this in documentation.

Manufacturers must demonstrate testing that plug-in generators intended for use in corrosive environments can withstand:

- Salt mist resistance, using the test specified in AS/NZS 61701:2023
- Ammonia resistance, using the test specified in AS/NZS IEC 62716:2023

5.5.3 Weather resistance

All components exposed to the environment must be resistant to weathering. Specific component requirements are in respective standards in section 6 of this standard.

5.6 Protection from electrocution

5.6.1 General

Manufacturers must design plug-in generators such that live parts are not accessible before, during, and after installation. Manufacturers must demonstrate compliance through testing using test probe B in accordance with AS IEC 61032:2023.

Any deformation to the cover or enclosure due to mechanical, thermal, or environmental stress must not impair protection.

Removable parts must be secured against loss or displacement where they could endanger persons, animals, or property.

5.7 Residual current devices

Manufacturers must design systems such that they do not adversely affect residual current device operation, including blinding during normal or single-fault conditions.

Plug-in generators must comply with DC residual current component requirements in section 7.3.8 of AS/NZS 62109.1:2026.

5.8 Protection from fire

Manufacturers must consider fire safety at system level, including the PV module, mounting system, the surface, or surfaces to which users will install or use it, and the chemistry and placements of any battery storage modules that form part of a plug-in generator.

The inverter of the plug-in generator must be designed to minimise fire risk under normal and fault conditions in accordance with AS/NZS 62109.1:2026, section 9.

The PV modules must comply with fire safety requirements of the IEC 61730:2023 set of standards (or local adoptions).

Battery energy storage modules intended to be used as part of a plug-in generator must use the following chemistries only:

- Lithium iron phosphate (LFP)
- Sodium ion (Na-ion)

Battery storage modules that use a lithium nickel-manganese-cobalt (NMC) chemistry are not permitted.

6 Technical requirements – connectors, cables, and faults

6.1 AC and DC cables

AC and DC cables must be:

- Suitable for the intended installation environment and operating conditions to minimise the risk of electric shock and fire under normal and fault conditions.
- Suitable for outdoor use if exposed to outdoor environment
- Where DC cables are intended to be installed outdoors, they must be resistant to outdoor weather conditions in accordance with EN 50618
- Supplied as part of the complete plug-in generator device or manufactured to a standard compatible to the same specification and quality as specified by the plug-in manufacturer.

Manufacturers must design AC cables in accordance with AS/NZS 3191:2008.

6.2 Plugs, socket-outlets, and connectors

6.2.1 General

Where the consumer is responsible for making connections during installation, the manufacturer must supply the product with pre-assembled cables and connectors fitted with cord sets that an ordinary person can operate.

On the DC side, requirements for connectors are in section 6.2.2.

On the AC side, requirements for plug connections are in section 6.2.3.

6.2.2 DC connectors

On the DC side, manufacturers must design connectors such that:

- All connectors meet requirements of AS/NZS 62852:2023 and come with preassembled cables.
- Only matching connector pairs from the same manufacturer are used, including adaptor lines and cables.
- Where an adaptor forms a compatible connection, the manufacturer preassembles it.
- The connector pairs must have an interlocking mechanism that can be released only with a tool, verified with the test according to AS/NZS 62852:2023.
- Connector pairs should be designed to be protected against shear and tensile stress at the terminations even when they are not fixed to a mounting surface by consumers
- Y-connectors must not be used.

DRAFT

6.2.3 AC connectors and stricter than standard residual voltage

6.2.3.1 General

On the AC side, the plug device for connection to the consumer's electrical installation must comply with one of the following subsections 6.2.3.2 to 6.2.3.4.

Where detachable AC connector systems are installed between the inverter and the connecting cable, they must:

- Have a relevant ingress rating equivalent to the inverter rating;
- Be labelled according to section 8.2.3.2;
- If a mechanically interlocked connecting system is used, then any other connecting system used between the inverter and connecting cable must be similarly mechanically interlocked.

Multi-way adaptors, travel adaptors and plug convertors must not be used.

6.2.3.2 Australian-New Zealand plug with added contact protection

Plug-in generators must use Type I plugs according to AS/NZS 3112:2025.

The plug-in generator inverter must cease its output if grid supply ceases (see section 6.2.3.3).

If the circuit providing primary contact protection fails, additional contact protection must be achieved by either:

- A mechanical solution with a locking mechanism, protective covers, or enclosures (section 5.2.3 of IEC 61140:2016) that prevents plug removal without using a tool before disconnection of the output from the inverter, or
- An electromechanical solution that provides automatic disconnection or separation of hazardous voltages during insertion or removal of the plug. This must operate independently of the main method of anti-islanding and must remove any dangerous voltages from the contacts within 2 seconds of disconnection.

Any additional protective components must comply with respective AS/NZS, ISO, and IEC standards.

6.2.3.3 Anti-islanding

6.2.3.3.1 General

A plug-in generator and the corresponding wall socket-outlet a mains connection that cannot be touched when inserted.

The manufacturer must design the plug-in generator to protect the user from hazardous voltages in plug contacts when removed from the socket-outlet.

Measurements in the inverter of the plug-in generator that prevent hazardous voltages in these plug contacts must comply with this section.

NOTE: Plug-in generators can produce a hazardous voltage. Therefore, the goal is electrical safety like that of other appliances that users connect to a standard wall outlet.

DRAFT

6.2.3.3.2 Protective measures

After unplugging the mains plug, the following measures must be required:

- fast interruption of the internal power conversion;
- fast discharge of capacitors that are not isolated from plug contacts;
- safe isolation of remaining hazardous voltage from plug contacts.

The following potentially hazardous voltages must be safely isolated from the plug contacts or quickly discharged:

- Capacitors that cannot be switched off, by observing certain discharge times as with consumer devices, as per AS/NZS 62368.1:2026
- Capacitors that can be switched off, and PV/battery power output, through quick interruption of power conversion.

This isolation function must be ensured even in the case of a fault in the device. A fault in the device must not result in a hazardous condition.

The isolation between hazardous voltages and the plug contacts must comply with:

a) requirements for double or reinforced insulation in the no-fault-present case, and

b) requirements for basic insulation in the fault-present case, in accordance with AS/NZS 62109.1:2026.

If software is used to fulfil the requirements, it must comply with annex B of AS/NZS 62109.1:2026.

The requirements are not influenced by inverter structure or topology.

6.2.3.3.3 Disconnection and isolation

Following disconnection from the mains supply, the inverter must prevent hazardous voltages from being present at accessible plug pins.

Power supply termination

An external resistance of greater than 2000 Ω must be applied across the plug pins of the mains plug for at least 40 s after disconnection, and for at least 40 s after mains reenergisation.

In deviation of ES1 (for ordinary person) of table 5 of AS/NZS 62368.1:2026, the inverter must automatically disconnect from the mains supply within 100 ms.

The voltage at accessible plug pins must decrease to below 34 V within 100 ms following disconnection from mains supply. This is taken from DIN VDE V 0126-95.

Protection against live pins

For normal operation, voltages at accessible plug pins must comply with the ES1 limits (for ordinary person) in table 5 of AS/NZS 62368.1:2026. Following disconnection from mains, capacitors larger than 100 nF must discharge to a voltage not exceeding 34 V within 1 s.

The test must be conducted at mains rated voltage and the following operating power:

- Maximum apparent power (S_{max})
- 0.5 S_{max}
- Minimum continuous operating power

The residual voltage must be measured directly on the capacitors. For Class I equipment (with protective earth), the voltages must additionally be measured between active

conductor, neutral conductor, and earth conductor. For Class II equipment (double insulated), the voltages must additionally be measured between active conductor and neutral conductor.

Isolation between live parts and accessible plug pins must provide double or reinforced insulation under normal conditions and at least basic insulation under single fault conditions, in accordance with AS/NZS 62109.1:2026.

6.2.3.4 Connector system on the inverter's AC side

When engaged, the plug and socket-outlet must provide a degree of protection of at least IP4XD for devices intended for outdoor installation. When not engaged, they must provide a degree of protection of at least IP2XB.

Manufacturers must demonstrate conformance by testing parts that can be removed without the use of a tool, and this testing must take place after removal.

Clearance and creepage distances must be measured according to IEC 60664-1:2020/AMD1:2025 for overvoltage category II.

AC interconnection or connection of multiple inverter units to the same circuit by means of extension cables, plug couplers or in-line connector systems must not be used.

NOTE: The requirements in this section are intended to ensure protection against electric shock in accordance with the principles of IEC 61140:2016.

6.3 Photovoltaic modules

Plug-in generator PV modules and subcomponents must meet the following standards:

- AS/NZS 61730.1:2024
- AS/NZS 61730.2:2024
- IEC 62790:2020
- AS/NZS 62852:2023
- AS/NZS IEC 62109.3:2023
- PV modules must fulfil protection class II according to AS/NZS 61730.1:2024 unless protection is by means of Safety Extra Low Voltage (SELV) or Protective Extra Low Voltage (PELV).

In addition to the requirements in AS/NZS 61730.1:2024 and AS/NZS 61730.2:2024, the methods of attachment used for the PV modules must be resilient in the event of fire. The PV module must be portable and must not require permanent fixing, structural attachment, or integration into the building fabric or structure.

6.4 Inverter

6.4.1 General

Plug-in generator inverters must meet certain conditions and type-testing outcomes:

- AS/NZS IEC 62109.3:2023 for PV module electronics if the PV module and inverter are supplied as a mechanical unit.
- AS/NZS IEC 62116:2020 for anti-island verification testing.
- AS/NZS 62109.1:2026 to an "outdoor" rating from table 4.
- AS/NZS 62109.1:2026 to decisive voltage class DVC C.

DRAFT

The inverter must be capable of handling the specified maximum permitted DC input and must not exceed the declared rated maximum apparent power.

The inverter must have a declared maximum apparent power not exceeding 800 VA. The inverter must be tested to determine its maximum apparent power output at supply voltages of 207 V, 254 V, and at the rated nominal voltage of 230/240 V. The inverter must be controlled such that under all test conditions, the current at the point of connection does not exceed 3.5 A.

For Class I equipment, in accordance with AS/NZS 3000:2018, a fault in the basic insulation between live parts and protective conductor must not result in an unsafe condition.

Where programmable electronic controls are used to fulfil these requirements, they must comply with safety requirements specified in annex B of AS/NZS 62109.1:2026.

6.4.2 AC side connection

The EMC properties of the inverter must be fulfilled according to 5.3 of this document.

If an additional unutilized AC connection is available, such as for the parallel connection of additional inverters, it must be closed with a cap that can only be removed with a tool.

6.4.3 Fault display and messages

The inverter must be provided with an interface, either integrated on the device or accessible via a third-party device like a mobile phone, that can display status information and error messages to users together with mitigation guidance.

Manufacturers must ensure faults are displayed according to AS/NZS IEC 62109.3:2023.

6.5 Battery storage modules

This section specifies requirements that are specific to optional battery energy storage components supplied as part of, or for standalone use as, a plug-in generator. It applies only to a battery that is:

- connected exclusively on the DC side of an inverter via a DC input specifically designated by the inverter manufacturer for battery connection, and
- not separately connected to the household AC wiring or to the grid by any means other than through an inverter covered by this TBS.

This section does not apply to hard-wired battery energy storage systems (e.g. home batteries), which are outside the TBS's scope and subject to the full set of AS/NZS 5139:2019 requirements.

All other TBS requirements, including power and current limits, anti-islanding, disconnection, and isolation on loss of mains, and electromagnetic compatibility, apply equally whether a battery is fitted, and are not repeated in this section.

Where a battery is fitted, the complete assembly (PV module, battery, and inverter) must continue to meet AC-side requirements of the TBS without any relaxation or modification attributable to the presence of a battery.

NOTE: The purpose of this section is to address battery-specific hazards, principally battery chemistry safety, thermal runaway, and battery management.

DRAFT

6.5.1 General

Battery-only plug-in generators (see section 4.2.2) may charge from the grid using a Type I plug (AS/NZS 3112:2025), but manufacturers must design the systems such that their maximum draw (AC) does not exceed 800 VA.

Only new cells may be used. Second-life, reconditioned or repurposed cells must not be used in a battery supplied under this TBS.

In documentation for a plug-in generator, the manufacturer must declare the battery chemistry, nominal voltage, nominal usable energy capacity, cell format (e.g. cylindrical, prismatic or pouch) and cell or module part numbers.

Battery storage modules for a plug-in generator must be rated to ambient operating temperatures of at least 55°.

The battery must be supplied as part of a complete kit that has been tested and declared compatible by the manufacturer with the specific inverter model(s) with which it is intended to be used. Compatibility must not be assumed between a battery and an inverter that have not been jointly certified.

6.5.2 Cell and battery safety

The manufacturer must design the battery enclosure and internal cell arrangement to limit the propagation of thermal runaway from a single cell to adjacent cells or modules.

Materials used in the battery enclosure must have a flammability rating no lower than UL 94 V-0 or must be demonstrated by test to provide an equivalent standard of fire performance.

Where a battery can vent gas under a fault condition, the enclosure and installation instructions must ensure any vented gas is directed away from occupied internal spaces, ignition sources, and escape routes. A battery intended for internal mounting must not vent directly into the interior of the dwelling.

Cells and batteries must pass tests in accordance with IEC 63056:2020, covering as a minimum the following categories:

- Cell tests from AS IEC 62619:2023
  - External short circuit
  - Impact test
  - Drop test
  - Thermal abuse
  - Overcharge
  - Forced discharge
  - Internal short circuit
  - Propagation test
- Battery system-level tests from AS IEC 62619:2023
  - Edge/corner drop
  - Overvoltage protection
  - Overcurrent protection
  - Overheating protection (5° above the rated limit).

The battery must be tested and classified for transport in accordance with UN 38.3, and the manufacturer must retain the test summary and make it available on request.

The manufacturer must declare the number of charge/discharge cycles and the calendar period over which the declared nominal usable energy capacity is expected to be maintained

within a stated tolerance and must specify the conditions (including temperature range and state of charge window) assumed in that declaration.

On detection of a condition outside the limits in this section, the battery management system (BMS) must independently disconnect or isolate the battery from the inverter, without reliance on any action by the inverter, the inverter's AC-side protection, or the user.

The manufacturer must design the BMS on a fail-safe basis. Communication loss between the BMS and inverter, loss of auxiliary power to the BMS, or a fault within the BMS, must each result in the battery defaulting to a disconnected safe state.

Where the BMS relies on programmable electronic controls to meet the requirements of this section, the software must be consistent with AS/NZS 62109.1:2026, annex B.

6.5.3 Electrical integration with the inverter (DC side)

A battery must not share a DC input with a PV module string in a configuration that has not been evaluated and declared safe by the manufacturer.

The battery's nominal voltage and operating voltage range, across its full state of charge window, must always remain within the declared DC input voltage range of the inverter.

Where PV modules and battery are connected to separate DC inputs on the same inverter, the manufacturer must demonstrate that the 2000 W_{dc} power limit is respected under all normal and single-fault conditions.

The manufacturer must design the battery and its connection to the inverter such that it prevents reverse current or fault current flowing from the battery into the PV module circuit, and from the PV module circuit into the battery outside the battery management system's normal charge control.

DC connectors used to connect the battery to the inverter must meet the connector requirements set out in this TBS.

Where a battery connector could otherwise be mated with a PV module connector, the connector system must prevent this mismatch, either by use of a non-interchangeable connector type or an equivalent keying arrangement.

The manufacturer must provide a manual means of isolating the battery from the inverter, allowing the battery to be safely disconnected for maintenance or in an emergency without requiring the AC plug to be withdrawn first. This may be achieved by a dedicated isolating switch or by a DC connector explicitly rated and intended by the manufacturer for disconnection under the conditions expected during normal use.

6.5.4 Marking and documentation

Manufacturers must mark plug-in generator battery storage modules in accordance with IEC 63056:2020.

Manufacturers must provide Safety Data Sheets (SDS) with plug-in generator battery storage systems and make SDS for systems available using a QR code affixed or embossed to the top of the unit.

Manufacturers must provide users with a green reflective label at least 100 mm in diameter, printed with the letters "ES – Plug in" and with the United Nations number for the primary chemistry of the battery. Manufacturers must include instructions that state this label is to be affixed to the user's switchboard.

DRAFT

6.5.6 Battery-specific mandatory type tests

In addition to the type tests specified in section 9.2 of the TBS, a battery-equipped plug-in generator is subject to type tests in the following table.

Ref	Topic	Type test	Test pass criteria
6.5.2	Cell and battery stress testing	Test in accordance with IEC 63056:2020.	Compliant test summary covering every listed category.
6.5.2	Thermal propagation	Thermal propagation test applied to the complete battery as supplied, in accordance with AS IEC 62619:2023.	Compliant test summary. (No propagation of thermal runaway beyond the initiating cell, or hazard contained per the test acceptance criteria)
6.5.2	Enclosure fire performance	UL 94 material flammability test.	Demonstrated UL 94 rating not lower than V-0.
6.5.2	Transport classification	Test sequence in accordance with UN 38.3.	Compliant T1-T8 test summary.
6.5.2	BMS software	Verified against annex B of AS/NZS 62109.1:2026.	Compliant with annex B.
6.5.3	DC voltage compatibility	Circuit analysis across the full state of charge window and PV operating range.	Declaration of conformance that the combined DC circuit remains within the voltage limits in section 4.

DRAFT

7 Distribution network requirements

Plug-in generators must comply with technical requirements to connect to, and operate in parallel with, distribution networks up to 1000 V.

In addition to component requirements specified elsewhere in this TBS, plug-in generator inverters must comply with region B settings (Western Power area) or region C settings (Horizon Power area) of AS/NZS 4777.2:2020, except:

- Reactive power requirements in clause 2.6
- Volt-var response requirements in clause 3.3.2
  Note: Systems must still meet volt-watt mode requirements in this clause.
- Demand response mode requirements in clause 6.2

NOTE: Anti-islanding requirements are in the previous section for inverter technical requirements, using the AS/NZS IEC 62116:2020 type test.

8 Marking and documentation

8.1 General

Instructions and references must be in English.

8.2 Marking

8.2.1 General

Inverter markings and identifications must comply with the requirements in table 7.2 of AS/NZS 4777.2:2020. Compliance is checked by inspection.

Plug-in generators must be marked with the Regulatory Compliance Mark (RCM) in accordance with AS/NZS 4417.1:2012 and AS/NZS 4417.2:2020.

8.2.2 Warning markings

Warning markings must comply with the requirements of AS/NZS 62109.1:2026, section 5.2.1.

Compliance is checked by inspection.

8.2.3 Marking

8.2.3.1 General

The individual components must be identified in accordance with their applicable product standard.

The product must be permanently marked with the following information:

- the names, registered trade names, or registered trademarks, as well as the postal address, email address of the manufacturer;
- a model number, name, or other designation for marking the product;

DRAFT

- a serial number, a code or other marking to ensure that the user can clearly identify the device;
- the following rated values:
  - mains voltage,
  - mains frequency,
  - highest continuous current,
  - rated power;
- IP degree of protection according to AS 60529:2025
- protective class;

NOTE where components of different protective classes are combined, the protective class of the overall product is determined by the lower one. For example, a system incorporating a protection class II PV module with a protection class I inverter must be considered class I.

- symbol for class II equipment in accordance with AS/NZS 62109.1:2026
- statement that a maximum of one (1) inverter may be plugged in per household;
- statement that notification to distribution network operator about connection and disconnection is mandatory, including a link to instructions on how to do so.

Where components of the product are removable or replaceable, the product must include a warning in a suitable location:

> *"Changes and replacement of any part must only be performed according to manufacturer's instructions to avoid hazards."*

The warning may additionally be accompanied by symbol 15 from AS/NZS 62109.1:2026, Table C.1 and a reference in the documentation.

All components must be labelled in a manner compliant with the EESS. All labels must be affixed visibly, legibly, and indelibly to the equipment itself.

Manufacturers must provide users with a green reflective label at least 100 mm in diameter, printed with the letters “PV – Plug in”, with instructions that state this label is to be affixed to the user’s switchboard.

8.2.3.2 Marking of the plug for connection with the domestic installation

The following information must be provided on the plug:

- Only one plug-in generator may be connected per household;
- The rated current (In) of the device;
- Mandatory sign M002 (ISO 7010-M002);
- A warning that plug-in generators must not be connected to extension cable or multi-way adaptor;
- All AC plugs must be marked and labelled in accordance with marking requirements of AS/NZS 3112:2025.

This permanent marking may be provided, for example, by means of a durable label or band positioned close to the plug.

Compliance is checked by inspection.

8.3 Documentation

8.3.1 General

The documentation supplied with the product must include the information needed for the safe assembly, operation and (where applicable) maintenance of the product. The documentation must contain the required information in 8.2.2 to 8.3.4 and the following additional information:

- Information on the intended and proper use of the product;
- Explanations of markings and symbols on the product;
- Identification and function of all connections, display, and control elements;
- Instructions to set the AS/NZS 4777.2:2020 region grid code to 'Region B' for customers in Western Power's service area and 'Region C' elsewhere.
- All ratings or specifications that are necessary for safe installation and operation, including the following environmental ratings as well as an explanation of their meaning:
    - Permissible ambient temperature range,
    - Guidance on selection of the installation location, including wind zones,
    - If applicable, any limitations relating to corrosive environments, e.g. marine environment, livestock farming,
    - Where the device is not suitable for installation in specific corrosive environments, this must be clearly stated in the manufacturer's documentation,
    - Whether the inverter is designed to be installed outside or inside the property or can be installed in either;
- The details of the DC connectors used, including type and manufacturer, to ensure compatibility between modules, inverter and other components;
- Declaration of compliance with applicable standards;
- Contact details of the manufacturer or retailer for technical support;
- Assembly instructions for the product must be provided including safe installation locations to minimise the risk of components falling, obstructing escape routes and endangering occupants, neighbours, or members of the public;
- The respectively permissible installation heights above ground based on the wind effects for the loaded area according to AS/NZS 1170.2:2021 must be provided for the product and the specified mounting types;
- The product must not be modified or installed in a manner not specified by the manufacturer;
- Users are responsible for obtaining any necessary planning permission;
- Instructions for notifying network operator of installation and decommission;
- The device must not be connected to damaged, degraded, or non-compliant socket-outlets. Users must be advised to seek inspection and assessment by a licensed electrician if there are any doubt regarding the condition of the installation;
- Users are responsible for checking, before installation, whether the product may affect any relevant insurance arrangements, including their own insurance and, where applicable, insurance covering the property or building.
- For the PV module, data sheet information must be provided in accordance with IEC 61730 requirements (or local adoptions).
- For the inverter, data sheet information must be provided according to AS/NZS 4777.2:2020 for the tests listed in section 6.4.1 of the TBS.

DRAFT

8.3.2 Assembly and setup

Assembly instructions must be sufficiently detailed to enable safe and correct assembly, and in a manner accordant with AS/NZS 61730.1:2024, AS/NZS 62109.1:2026, AS/NZS 62109.2:2026, and AS/NZS IEC 62109.3:2023.

The documentation must include assembly instructions and, where applicable, product-specific instructions for commissioning, information to prevent foreseeable misuse and warnings relating to hazards that can occur during assembly or commissioning of the product.

The following information must be provided:

- General safety instructions: Any necessary testing and modifications of the building's electrical system ("installation") must only be performed by licensed electricians in accordance with the Wiring Rules.
- Where connection of the product requires modifications to the final circuit of the domestic installation, manufacturers must clearly state this work as work that can only be performed by a licensed electrician in accordance with the Wiring Rules.
- Manufacturers must advise users to check that the electrical installation is equipped with modern residual current protection (RCBO and RCD) and is in good condition.
- Clearly state that only one plug-in generator may be installed per household;
- Clearly state that the use of extension cables, multi-way adaptors and travel adaptors are not permitted;
- Information regarding connection procedure and cable management;
- Information that the DC connectors must not be disconnected under load and that the AC supply must be turned off before disconnecting DC connections;
- Information regarding permissible mounting types (e.g. attachment on a balcony railing, on the roof, overhead and/or on the facade);
- Requirements for assembly and mounting depending on the location. Any attachment method must be reversible and non-permanent, and must not compromise the structural integrity, fire performance, or weatherproofing of the building;
- The manufacturer's specified mounting procedure for PV module(s) and inverters;
- A detailed list of the individual components for the specified mounting system;
- Information regarding fastening or ballasting depending on expected wind load;
- Ventilation requirements for safe operation;
- Information regarding minimum spacing and positioning requirements for PV modules;
- Limitations on mounting conditions (e.g. fastening material, cooling);
- Information that in the case of buildings with a lightning protection system, the necessary separation distance from the discharges of the lightning protection system in accordance with AS 1768:2021 must be observed;
- Instructions on safe installation of cables to reduce the risk of accident (e.g. pull relief, bending radii, no installation in the ground or wet areas);
- Information that plug-in generators must not be connected to multiple socket-outlets or multi-way adaptors;
- Information that only connection cables specified or approved by the manufacturer may be used;
- Information that users are responsible to keep escape and rescue paths clear;

DRAFT

- Information that users are responsible for ensuring that PV modules are installed in a way that does not increase the risk of fire spreading along external walls or balconies to neighbouring properties;
- Information that users are responsible for ensuring that PV modules are not installed on or fixed to walls or other parts of the building that form a property boundary between dwellings;
- Clear information on current registration and deregistration obligations with the distribution network operator, including provision of a QR code directing consumers to the relevant guidance and registration process;
- Instructions to affix the label provided to the switchboard in a clearly visible location. Instructions must also be provided that, where the switchboard is replaced or relocated, a new label must be produced and affixed accordingly.
- Instructions for the operation and adjustment of controls;
- Instructions for connection to accessories and other components, including identification of suitable compatible equipment;
- Explanation of indications of operating status;
- Procedure to follow in the event of faults or defects;
- A statement that operation other than that as specified by the manufacturer may impair safety;
- Recommended intervals and procedures for inspection and maintenance, including visual checks of fixings, cables and connectors;
- Instructions for safe cleaning where applicable.

8.3.3 Identifying circuits

Modern electrical installations typically have configurations with RCBOs per circuit, or miniature circuit breaker (MCB) per circuit with shared residual current protection upstream. These devices are operated with individual switches that can be turned on and off.

Where the switchboard does not use modern protective devices, is not clearly labelled, or is of unknown condition, users must be advised to seek inspection and assessment by a licensed electrician before installing the product.

NOTE: Illustrations may be provided to assist users in identifying switchboard types and electrical circuits.

8.3.4 Decommissioning and disassembly

The documentation must contain information regarding the procedure to follow for decommissioning and disposal.

Compliance is checked by inspection.

8.3.5 Disposal

The information must be compliant with the WA Waste Avoidance and Resource Recovery (e-waste) Regulations 2024.

DRAFT

9 Device tests

9.1 General

Plug-in generators are subject to type testing to demonstrate compliance with the TBS.

Type tests must:

- be performed on a representative device,
- demonstrate compliance with all applicable sections of this specification, and
- be documented in a test report retained by the manufacturer.

Manufacturers must produce and retain a technical file demonstrating compliance, including:

- test reports;
- calculations (e.g. structural loading);
- conformity with referenced standards.

Records must be retained for a minimum period of 10 years after the last manufacture of the device type.

9.2 Type tests

Manufacturers must type test plug-in generators in accordance with applicable Australian, New Zealand, and international standards, including as a minimum those outlined in the following table.

Ref	Topic	Type test	Test pass criteria
Section 4 – Configuration and maximum power output			
4.2.1	Protection class	Classification verified against IEC 61140:2016.	Declared and verified as class I or class II equipment.
6.5.1	Maximum AC charging draw	Measurement of AC input power during charging, for battery-only and grid-chargeable systems, at 207 V, 254 V, and the nominal rated voltage.	AC draw does not exceed 800 VA at any test voltage.
Section 5 – Technical requirements: electrical and mechanical			
5.2	Overvoltage category	Verified against IEC 60664-1:2020/AMD1:2025.	Minimum overvoltage category II achieved.
5.3	EMC – immunity	Test in accordance with AS/NZS 61000.6.1:2025, carried out at the inverter's maximum rated apparent power (not exceeding 800 VA).	Declared performance criteria A and B met.
5.3	EMC – emissions	Test in accordance with AS/NZS 61000.6.3:2021, carried out at the maximum power the inverter is capable of across the declared DC input voltage range.	Within the emission limits of AS/NZS 61000.6.3:2021.
5.4	Ingress protection – outdoor use	Test in accordance with AS 60529:2025 category 1, under the mounting, cabling and gland conditions listed in section 5.4, applied to plug-in generator	Not less than IP55, achieved either by component rating or by the complete assembly.

DRAFT

Ref	Topic	Type test	Test pass criteria
		components, connections between components and plugs.	
5.4	Ingress protection – indoor use	Test in accordance with AS 60529:2025 on components and connections intended for indoor use.	Not less than IP44.
5.4	Access to hazardous parts	Test probe B applied in accordance with AS IEC 61032:2023, with a test force of 1 N, after removal of parts removable without a tool.	Test probe does not contact hazardous parts.
5.5	Protection against mechanical hazards	Test in accordance with AS/NZS 61730.2:2024.	Passes the applicable AS/NZS 61730.2:2024 test methods. Accessible features smooth and deburred, with no risk of injury or damage to insulation.
5.5.1	Mounting system – structural adequacy	AS/NZS 1170.2:2021 up to region B And AS/NZS 1664.1:1997 or AS/NZS 1664.2:1997 where aluminium members are used.	Calculation demonstrates mechanical stability with no detachment, instability, or falling components under the declared wind loading.
5.5.2.2	Corrosion – salt mist	Test in accordance with AS/NZS 61701:2023.	Passes, for devices declared suitable for marine or other corrosive environments.
5.5.2.2	Corrosion – ammonia	Test in accordance with AS/NZS IEC 62716:2023.	Passes, for devices declared suitable for agricultural or other corrosive environments.
5.6.1	Protection from electrocution – accessibility of live parts	Test using test probe B in accordance with AS IEC 61032:2023.	Live parts not accessible in any state.
5.6.1	Protection from electrocution – enclosure deformation	Application of mechanical, thermal, and environmental stress to the cover or enclosure, followed by repeat of the probe test.	Protection against access to live parts not impaired by any resulting deformation.
5.7	Residual current device compatibility	Test in accordance with AS/NZS 62109.1:2026, under normal and single-fault conditions.	Device operates without impairing RCD.
5.7	DC residual current	Test in accordance with clause 7.3.8 of AS/NZS 62109.1:2026.	Complies with the DC residual current component requirements of that clause.
5.8	Fire safety – inverter	Verified against clause 9 of AS/NZS 62109.1:2026.	Fire risk minimised under normal and fault conditions.
5.8	Fire safety – PV module	Compliance with the fire safety requirements of IEC 61730:2023 (or local adoptions).	Certification of conformity.

DRAFT

Ref	Topic	Type test	Test pass criteria
Section 6 – Technical requirements: connectors, cables, and faults			
6.1	DC cable suitability	Test in accordance with EN 50618:2014 for cables intended for outdoor installation.	DC cables suitable for the declared environmental conditions.
6.1	AC cable suitability	Test in accordance with AS/NZS 3191:2008.	AS/NZS 3191:2008 test report for the supplied AC cable and cord set.
6.2.2	DC connectors – standard compliance	Compliant with AS/NZS 62852:2023.	Certification of conformity. Connectors supplied pre-assembled with cables.
6.2.2	DC connectors – matching, interlock, and adaptors	Lock release test in accordance with AS/NZS 62852:2023.	Only matching connector pairs from the same product family used, including adaptor lines and cables. Interlocking mechanism releasable only with a tool. Any adaptor forming a compatible connection is pre-assembled by the manufacturer. No Y-connectors.
6.2.3.2	AC plug – conformity	Plug design in in accordance with AS/NZS 3112:2025.	Compliant Type I three-pin plug with half-insulated pins.
6.2.3.2	Additional contact protection – mechanical solution	Compliant with clause 5.2.3 of IEC 61140:2016.	Locking mechanism, protective cover or enclosure prevents removal of the plug without a tool before the inverter output is disconnected.
6.2.3.3.2	Isolation of hazardous voltages from plug contacts	Insulation verified against AS/NZS 62109.1:2026, in the error-free case and under a single fault condition.	Double insulation in the error-free case and at least basic insulation under a single fault. Isolation maintained in the case of a fault in the device.
6.2.3.3.2	Software-implemented protective functions	Verified against AS/NZS 62109.1:2026.	Compliant with annex B.
6.2.3.3.3	Protection from live pins	Test in accordance with AS/NZS 62368.1:2026. For class I equipment, additionally between active conductor, neutral conductor, and earth conductor. For class II, additionally between active and neutral conductors.	External resistance greater than 2000Ω applied across the plug pins for at least 40s after disconnection and at least 40s after re-energisation. Automatic disconnection from mains supply within 100 ms. Voltage at accessible plug pins falls below 34 V within 100 ms of disconnection. ES1 limits for an ordinary person (table 5) met in normal operation.

DRAFT

Ref	Topic	Type test	Test pass criteria
6.2.3.3.3	Capacitor discharge	Measurement taken directly at the capacitors, at rated mains voltage, at Smax, 0.5 Smax, and minimum continuous operating power.	Capacitors larger than 100 nF discharge to a voltage not exceeding 34 V within 1 s of disconnection.
6.2.3.4	AC plug and socket-outlet – ingress protection	Test in accordance with AS 60529:2025, carried out after removal of parts removable without a tool, for devices intended for outdoor installation.	Not less than IP4XD when engaged. Not less than IP2XB when not engaged.
6.2.3.4	Clearance and creepage distances	Tested in accordance with IEC 60664-1:2020/AMD1:2025 for overvoltage category II.	Required clearance and creepage distances met.
6.3	PV module – standard compliance	Compliant with: AS/NZS 61730.1:2024 AS/NZS 61730.2:2024 IEC 62790:2020 AS/NZS 62852:2023 AS/NZS IEC 62109.3:2023	Conformity certificates for each applicable standard.
6.3	PV module – protection class	Verified against AS/NZS 61730.1:2024.	Protection class II, unless protection is by SELV or PELV, in which case the basis is declared and verified.
6.4.1	Inverter – safety standard compliance	Compliant with: AS/NZS 62109.1:2026 AS/NZS 62109.2:2026 And with AS/NZS IEC 62109.3:2023 where the PV module and inverter are supplied as a mechanical unit.	Conformity certificates for each applicable standard.
6.4.1	Inverter – outdoor rating	Table 4 of AS/NZS 62109.1:2026.	Outdoor rating verified.
6.4.1	Inverter – decisive voltage class	Classification in accordance with AS/NZS 62109.1:2026.	Decisive voltage class DVC C.
6.4.1	Anti-islanding	Test in accordance with AS/NZS IEC 62116:2020.	Islanding prevented within the required times.
6.4.1	Grid connection performance	Test in accordance with AS/NZS 4777.2:2020 appendices B, C, F, G (excluding volt-var tests), I and J. Appendix K applies only where the device uses more than one inverter. Appendix M applies only where a battery storage module can be charged from the grid.	Type test certificate issued by a NATA-accredited testing laboratory covering each applicable appendix.

DRAFT

Ref	Topic	Type test	Test pass criteria
6.4.3	Fault display and messages	Functional test of the display interface, whether integrated on the device or accessed via a third-party device.	Status information and error messages displayed to the user with mitigation guidance, in accordance with AS/NZS IEC 62109.3:2023.
Section 8 – Marking and documentation			
8.2.1	Inverter markings	Inspection against table 7.2 of AS/NZS 4777.2:2020.	Markings clearly visible, legible, and durable.
8.2.1	Regulatory Compliance Mark	Inspection against AS/NZS 4417.1:2012 and AS/NZS 4417.2:2020.	RCM correctly applied.
8.2.2	Warning markings	Inspection against clause 5.2.1 of AS/NZS 62109.1:2026.	Warnings clearly visible, legible, and durable.
8.2.3.2	Plug marking	Inspection against section 8.2.3.2.	All listed information present, including the one-generator-per-household statement, ISO 7010-M002 sign, and the warning against extension cables and multi-way adaptors. Any AS/NZS 3112:2025 marking requirements met.
8.3.1	Documentation – general	Inspection against section 8.3.1.	Contains all listed information, including PV module data sheet information per AS/NZS 61730.1:2024 and inverter data sheet information per AS/NZS 4777.2:2020.
8.3.2	Documentation – assembly and setup	Inspection against section 8.3.2.	All listed information present and consistent with AS/NZS 61730 and IEC 62109 families of standards.
8.3.3	Documentation – identifying circuits	Inspection against section 8.3.3.	Guidance provided enabling a user to identify which socket-outlets are supplied by the same circuit and advising when to consult a licensed electrician.
8.3.4, 8.3.5	Documentation – decommissioning and disposal	Inspection against sections 8.3.4 and 8.3.5.	Decommissioning and disassembly procedure provided. Disposal information in line with the Waste Avoidance and Resource Recovery (e-waste) Regulations 2024.

DRAFT

9.3 Reporting

Upon completion of testing, a type test report must be produced containing:

- identification of the tested device
- test methods used
- measured values.
- confirmation of compliance

Evidence of type testing must be submitted for registration using the Electrical Equipment Safety System (EESS) to support verification that the product is compliant.

DRAFT